# Polymer PTC Resetable Fuse For Battery Protection JK-P Series

## Features:

- ✧ Strap devices，Axial leaded
- ✧ Protection for NiCd/NiMH rechargesble battery packs,Li-ion/Polymer Li-ion battery
- ✧ Lead-free
- ✧ Halogen free
- ✧ Agency recognition:UL、CSA、TUV

No.E217453 TÜVRheinland® Precisely Right. No. R 50324498 TÜVRheinland® Precisely Right. No. R 50080891 RoHS Compliant

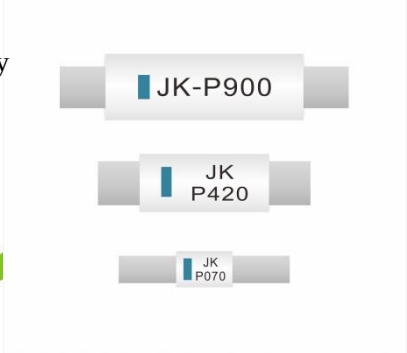


## Product Dimensions

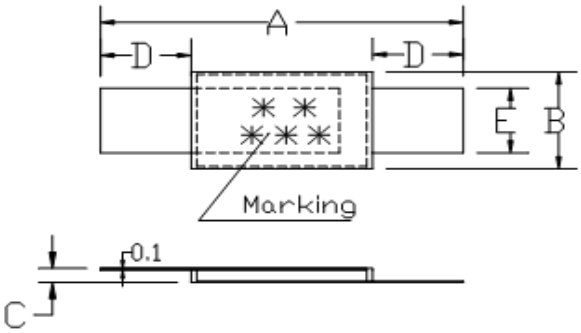


Unit ： mm

JK-P Series

| Model | A | | B | | C | | D | | E | |
|---|---|---|---|---|---|---|---|---|---|---|
| | Min | Max | Min | Max | Min | Max | Min | Max | Min | Max |
| JK-P070 | 17.0 | 22.1 | 4.9 | 5.5 | 0.4 | 1.0 | 3.5 | 6.0 | 3.8 | 4.2 |
| JK-P100 | 17.0 | 22.1 | 4.9 | 5.5 | 0.4 | 1.0 | 3.5 | 6.0 | 3.8 | 4.2 |
| JK-P120 | 17.0 | 22.1 | 4.9 | 5.5 | 0.4 | 1.0 | 3.5 | 6.0 | 3.8 | 4.2 |
| JK-P175 | 20.9 | 23.1 | 4.6 | 5.5 | 0.4 | 1.0 | 3.5 | 6.0 | 3.8 | 4.2 |
| JK-P180 | 20.9 | 23.1 | 4.6 | 5.5 | 0.4 | 1.0 | 3.5 | 6.0 | 3.8 | 4.2 |
| JK-P190 | 20.9 | 23.1 | 4.6 | 5.5 | 0.4 | 1.0 | 3.5 | 6.0 | 3.8 | 4.2 |
| JK-P200 | 20.9 | 23.1 | 4.6 | 5.5 | 0.4 | 1.0 | 3.5 | 6.0 | 3.8 | 4.2 |
| JK-P210 | 20.9 | 23.1 | 4.6 | 5.5 | 0.4 | 1.0 | 3.5 | 6.0 | 3.8 | 4.2 |
| JK-P260 | 20.9 | 23.1 | 4.6 | 5.5 | 0.4 | 1.0 | 3.5 | 6.0 | 3.8 | 4.2 |
| JK-P300 | 24.0 | 27.5 | 6.9 | 7.5 | 0.4 | 1.0 | 4.0 | 7.5 | 4.8 | 5.2 |

***ShenZhen JinRui Electronic Material Co.,Ltd***

TEL： 0755-26546327 29356619 FAX：0755-26546562

Web Site：http://www.jkpptc.com E-mail:customer@jkpptc.com

Add：JinKe Industry Park ,No. 310,Wuhe Road ,Guanlan,Longhua,Shenzhen ,Guangdong。

***Specifications are subject to change without notice ！***

| | | | | | | | | | | |
|---|---|---|---|---|---|---|---|---|---|---|
| JK-P350 | 24.0 | 27.5 | 6.9 | 7.5 | 0.4 | 1.0 | 4.0 | 7.5 | 4.8 | 5.2 |
| JK-P380 | 24.0 | 27.5 | 6.9 | 7.5 | 0.4 | 1.0 | 4.0 | 7.5 | 4.8 | 5.2 |
| JK-P420 | 24.0 | 27.5 | 9.8 | 10.5 | 0.4 | 1.0 | 4.0 | 7.5 | 4.8 | 5.2 |
| JK-P450 | 24.0 | 27.5 | 9.8 | 10.5 | 0.4 | 1.0 | 4.0 | 7.5 | 4.8 | 5.2 |
| JK-P550 | 24.0 | 27.5 | 9.8 | 10.5 | 0.4 | 1.0 | 4.0 | 7.5 | 4.8 | 5.2 |
| JK-P600 | 27.1 | 29.1 | 13.9 | 14.5 | 0.4 | 1.0 | 4.1 | 5.5 | 5.9 | 6.6 |
| JK-P730 | 27.1 | 29.1 | 13.9 | 14.5 | 0.4 | 1.0 | 4.1 | 5.5 | 5.9 | 6.6 |
| JK-P900 | 45.4 | 47.6 | 7.9 | 8.5 | 0.4 | 1.0 | 4.6 | 6.2 | 5.9 | 6.1 |
| JK-P1410 | 58.0 | 60.0 | 13.4 | 14.0 | 0.4 | 1.0 | 4.2 | 5.8 | 5.9 | 6.1 |

## Thermal Derating Chart-IH（A）

JK-P Series

| Model | Maximum ambient operating temperatures（℃） | | | | | | | | | |
|---|---|---|---|---|---|---|---|---|---|---|
| | -40 | -20 | 0 | 25 | 40 | 50 | 60 | 70 | 80 | 85 |
| JK-P070 | 1.1 | 1.0 | 0.8 | 0.7 | 0.5 | 0.4 | 0.3 | 0.2 | 0.2 | 0.1 |
| JK-P100 | 1.8 | 1.6 | 1.4 | 1.0 | 0.8 | 0.7 | 0.6 | 0.4 | 0.3 | 0.2 |
| JK-P120 | 1.9 | 1.7 | 1.5 | 1.2 | 1.0 | 0.9 | 0.8 | 0. 6 | 0.5 | 0.4 |
| JK-P175 | 2.5 | 2.2 | 2.0 | 1.75 | 1.4 | 1.3 | 1.2 | 1.0 | 0.9 | 0.8 |
| JK-P180 | 2.6 | 2.3 | 2.1 | 1.8 | 1.4 | 1.3 | 1.2 | 1.0 | 0.9 | 0.8 |
| JK-P190 | 2.8 | 2.5 | 2.3 | 1.9 | 1.5 | 1.4 | 1.3 | 1.1 | 0.9 | 0.8 |
| JK-P200 | 3.1 | 2.8 | 2.5 | 2.0 | 1. 7 | 1.5 | 1.4 | 1.2 | 1.0 | 0.9 |
| JK-P210 | 3.3 | 3.0 | 2.7 | 2.1 | 1.8 | 1.6 | 1.5 | 1.3 | 1.1 | 1.0 |
| JK-P260 | 3.8 | 3.4 | 3.1 | 2.6 | 2.2 | 2.0 | 1.9 | 1.7 | 1.4 | 1.3 |
| JK-P300 | 5.1 | 4.4 | 3.7 | 3.0 | 2.3 | 1.9 | 1.6 | 1.2 | 0.9 | 0.7 |
| JK-P350 | 5.3 | 4.8 | 4.3 | 3.5 | 3.0 | 2.7 | 2.5 | 2.1 | 1.8 | 1.7 |
| JK-P380 | 5.4 | 4.9 | 4.4 | 3.8 | 3.3 | 3.0 | 2.8 | 2.5 | 2.3 | 2.1 |
| JK-P420 | 6.3 | 5.7 | 5.1 | 4.2 | 3.6 | 3.3 | 3.0 | 2.6 | 2.2 | 2.1 |
| JK-P450 | 6.5 | 5.8 | 5.3 | 4.5 | 3.9 | 3.6 | 3.3 | 2.9 | 2.6 | 2.4 |
| JK-P550 | 7.6 | 6.9 | 6.2 | 5..5 | 4.7 | 4.3 | 4.0 | 3.6 | 3.2 | 3.0 |
| JK-P600 | 8.7 | 7.8 | 7.1 | 6.0 | 5.2 | 4.7 | 4.4 | 3.9 | 3.4 | 3.2 |
| JK-P730 | 10.5 | 9.5 | 8.6 | 7.3 | 6.3 | 5.7 | 5.4 | 4.7 | 4.2 | 4.0 |
| JK-P900 | 12.7 | 11.4 | 10 | 9.0 | 7.5 | 6.8 | 6.2 | 5.5 | 4.9 | 4.5 |
| JK-P1410 | 19.9 | 17.8 | 15.7 | 14.1 | 11.8 | 10.8 | 9.7 | 8.7 | 7.7 | 7.2 |

***ShenZhen JinRui Electronic Material Co.,Ltd***
TEL： 0755-26546327 29356619 FAX：0755-26546562
Web Site：http://www.jkpptc.com E-mail:customer@jkpptc.com
Add：JinKe Industry Park ,No. 310,Wuhe Road ,Guanlan,Longhua,Shenzhen ,Guangdong。
***Specifications are subject to change without notice！***

Typical Time-to-Trip Charts at 25℃

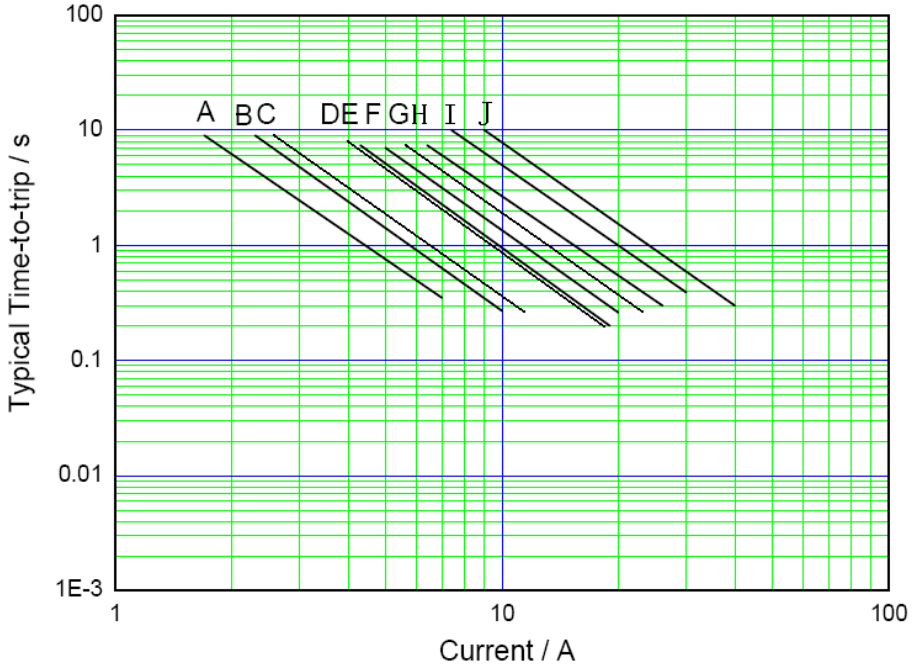


A----JK-P070
B----JK-P100
C----JK-P120
D----JK-P175
E----JK-P180
F----JK-P190
G----JK-P200
H----JK-P210
I----JK-P260
J----JK-P300

***ShenZhen JinRui Electronic Material Co.,Ltd***
TEL： 0755-26546327 29356619 FAX：0755-26546562
Web Site：http://www.jkpptc.com E-mail:customer@jkpptc.com
Add：JinKe Industry Park ,No. 310,Wuhe Road ,Guanlan,Longhua,Shenzhen ,Guangdong。
***Specifications are subject to change without notice！***

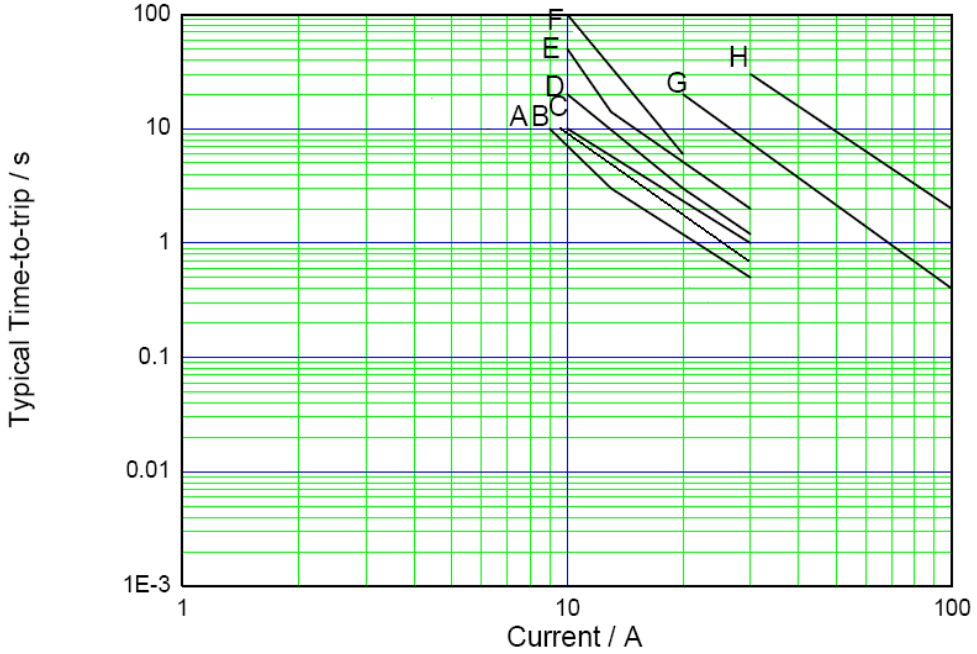


A--- JK-P350
B--- JK-P420
C--- JK-P450
D--- JK-P550
E--- JK-P600
F--- JK-P730
G--- JK-P900
H--- JK-P1410

## Electrical Characteristic

| Model | $I_{hold}$ | $I_{trip}$ | $V_{max}$ | $I_{max}$ | $P_d$ | Maximum Time-to-trip | | $R_{min}$ | $R_{max}$ | $R_{1max}$ |
|---|---|---|---|---|---|---|---|---|---|---|
| | (A) | (A) | (V) | (A) | (W) | Current(A) | Time(S) | (Ω) | (Ω) | (Ω) |
| JK-P070 | 0.70 | 1.45 | 16 | 100 | 1.60 | 3.5 | 5.0 | 100 | 200 | 400 |
| JK-P100 | 1.00 | 2.50 | 16 | 100 | 1.60 | 5.0 | 5.0 | 70 | 130 | 260 |
| JK-P120 | 1.20 | 2.70 | 16 | 100 | 1.60 | 6.0 | 5.0 | 60 | 120 | 240 |
| JK-P175 | 1.75 | 3.80 | 16 | 100 | 1.60 | 8.5 | 5.0 | 30 | 65 | 130 |
| JK-P180 | 1.80 | 3.80 | 16 | 100 | 1.60 | 9.0 | 5.0 | 30 | 60 | 120 |
| JK-P190 | 1.90 | 4.20 | 16 | 100 | 1.60 | 9.5 | 5.0 | 25 | 45 | 90 |
| JK-P200 | 2.00 | 4.40 | 16 | 100 | 1.60 | 10.0 | 5.0 | 20 | 40 | 80 |
| JK-P210 | 2.10 | 4.40 | 16 | 100 | 1.60 | 10.5 | 5.0 | 20 | 35 | 70 |
| JK-P260 | 2.60 | 5.20 | 16 | 100 | 1.60 | 13.0 | 5.0 | 15 | 30 | 60 |
| JK-P300 | 3.00 | 6.30 | 24 | 100 | 2.40 | 15.0 | 5.0 | 15 | 31 | 62 |
| JK-P350 | 3.50 | 7.00 | 24 | 100 | 2.40 | 17.5 | 5.0 | 17 | 31 | 62 |
| JK-P380 | 3.80 | 7.60 | 24 | 100 | 2.40 | 19.0 | 5.0 | 13 | 22 | 44 |
| JK-P420 | 4.20 | 8.30 | 24 | 100 | 2.00 | 21.0 | 5.0 | 12 | 24 | 48 |
| JK-P450 | 4.50 | 9.00 | 20 | 100 | 2.00 | 22.5 | 5.0 | 11 | 20 | 40 |
| JK-P550 | 5.50 | 10.50 | 20 | 100 | 2.00 | 27.5 | 5.0 | 9 | 16 | 32 |

***ShenZhen JinRui Electronic Material Co.,Ltd***
TEL： 0755-26546327 29356619 FAX：0755-26546562
Web Site：http://www.jkpptc.com E-mail:customer@jkpptc.com
Add：JinKe Industry Park ,No. 310,Wuhe Road ,Guanlan,Longhua,Shenzhen ,Guangdong。
***Specifications are subject to change without notice！***

| | | | | | | | | | | |
|---|---|---|---|---|---|---|---|---|---|---|
| JK-P600 | 6.00 | 11.70 | 20 | 100 | 2.80 | 30.0 | 5.0 | 7 | 14 | 28 |
| JK-P730 | 7.30 | 14.10 | 20 | 100 | 3.30 | 36.5 | 5.0 | 5 | 12 | 24 |
| JK-P900 | 9.00 | 16.70 | 20 | 100 | 3.80 | 45.0 | 5.0 | 6 | 10 | 20 |
| JK-P1410 | 14.10 | 26.20 | 20 | 100 | 6.00 | 70.5 | 5.0 | 3 | 5 | 10 |

## Marking System

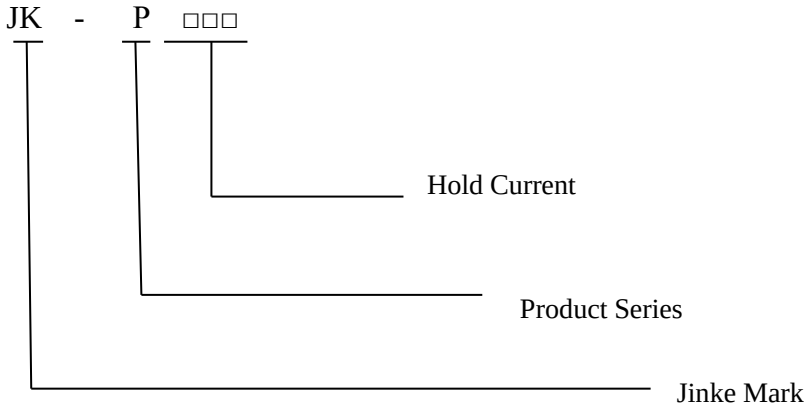


## Test Procedures And Requirements

| **Test** | **Test Conditions** | **Accept/Reject Criteria** |
|---|---|---|
| Resistance | In still air at 25℃ | $R_{min} \leq R \leq R_{max}$ |
| Time to Trip | Specified current,$V_{max}$,25℃ | T≤maximum Time to Trip |
| Hold Current | 60min,at $I_H$ | No trip |
| Trip Cycle Life | $V_{max}$,$I_{max}$,1000cycles | No arcing or burning |
| Trip Endurance | $V_{max}$,1 hours | No arcing or burning |

## Physical Characteristics and Environmental Specifications

**Physical Characteristics**

| | |
|---|---|
| Lead material | 0.1mm nominal thickness,quarter-hard nickel |
| Tape material | Polyester |

**Environmental Specifications**

| **Test** | **Conditions** | **Resistance Change** |
|---|---|---|
| Passive aging | 70℃,1000hours | ±10% |
| Humidity aging | 85℃/85%RH.7days | ±5% |

***ShenZhen JinRui Electronic Material Co.,Ltd***
TEL： 0755-26546327 29356619 FAX：0755-26546562
Web Site：http://www.jkpptc.com E-mail:customer@jkpptc.com
Add：JinKe Industry Park ,No. 310,Wuhe Road ,Guanlan,Longhua,Shenzhen ,Guangdong。
***Specifications are subject to change without notice！***

| | | |
|---|---|---|
| Vibration | MIL-STD-883C,Test Condition A | No change |

## Electrical Specifications:

$I_{hold}$=Hold current: maximum current device will not trip in 25℃ still air.
$I_{trip}$= Trip current: minimum current device will always trip in 25℃ still air.
$V_{max}$=Maximum voltage device can withstand without damage at rated current($I_{max}$).
$I_{max}$=Maximum fault current device can withstand without damage at rated voltage($v_{max}$).
$P_{d\ max}$= Typical power dissipation: typical amount of power dissipated by the device when in state air environment.
Maximum Time-to-trip=Maximum time to trip(s) at assigned current.
$R_{min}$=Minimum device resistance prior to tripping at 25℃.
$R_{max}$=Maximum device resistance prior to tripping at 25℃.
$R_{1max}$=Maximum device resistance one hour after it is tripped at 25℃

## Packaging and Storage

**Packaging**
Bulk,500/1000pcs per bag

**Storage**
The maximum ambient temperature shall not exceed 40℃. Storage temperatures higher than 40℃couldresult in the deformation of packaging materials. The maximum relative humidity recommended for storage is 70%. High humidity with high temperature can accelerate the oxidation of the solder plating on the termination and reduce the solderability of the components. Sealed plastic bags with desiccant shall be used to reduce the oxidation of the termination and shall only be opened prior to use. The products shall not be stored in areas where harmful gases containing sulfur or chlorine are present.

## Warning:

• Please read this specification before using the product.
• Use PPTC beyond the maximum ratings or improper use may result in device damage，electrical arcing and flame.
• PPTC are intended for protection against occasional over current or over temperature fault conditions and should not be used when repeated fault conditions or prolonged trip events are anticipated.
• Device performance can be impacted negatively if devices are handled in a manner inconsistent with recommended electronic, thermal, and mechanical procedures for electronic components.
• Use PPTC with a large inductance in circuit will generate a circuit voltage above the rated voltage of the PPTC.
• Avoid impact PPTC device its thermal expansion like placed under pressure or installed in limited space.
• Contamination of the PPTC material with certain silicon based oils or some aggressive solvents can adversely impact the

***ShenZhen JinRui Electronic Material Co.,Ltd***
TEL： 0755-26546327 29356619 FAX：0755-26546562
Web Site：http://www.jkpptc.com E-mail:customer@jkpptc.com
Add：JinKe Industry Park ,No. 310,Wuhe Road ,Guanlan,Longhua,Shenzhen ,Guangdong。
***Specifications are subject to change without notice！***

performance of the devices. PPTC can be cleaned by standard methods.

**Notes：**

The specification is intended to present application product and technical data to assist the user in selecting PPTC circuit production devices.However,users should independently evaluate and test the suitability of each product.Jinrui makes on warranties as to the accuracy or completeness of the information and disclaims any liability resulting from its use,Jinrui's only obligations are those in the Jinrui Standard Terms and Conditions of Sale and in no case will Jinrui be liable for any incidental,indirect,or consequential damages arising from the sale,resale,or misuse of its products. Jinrui reserves the right to change of update any information contained in this specification without notice.

***ShenZhen JinRui Electronic Material Co.,Ltd***
TEL： 0755-26546327 29356619 FAX：0755-26546562
Web Site：http://www.jkpptc.com E-mail:customer@jkpptc.com
Add：JinKe Industry Park ,No. 310,Wuhe Road ,Guanlan,Longhua,Shenzhen ,Guangdong。
***Specifications are subject to change without notice！***